514T Full Port Gate Valve • Spec Sheet

FEATURES & BENEFITS

- ISO-9001
- 200 WOG - 125 SWP
- Full Port
- Cast Brass
- Non-rising Stem
- Threaded Bonnet
- Threaded Ends Conform to ANSI Standards B2.1
- Valves are Tested in Accordance w/ MSS-SP-82
- Sizes 1/4" - 4“

*Available with Brass Cross Handle or 5 Point Crown Wheel Handle

APPLICATIONS:

Commercial & Light Industrial
Steam, Water, Oil or Gas

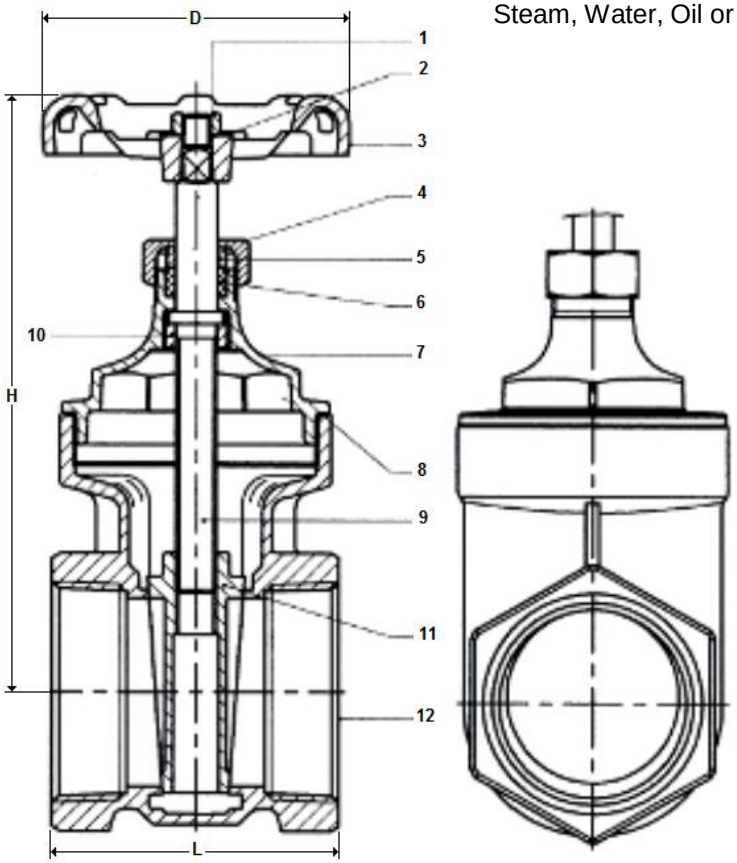

DIMENSIONS

Size	Part #	D	H	L
1/4”	514T01	2.09	2.92	1.71
3/8”	514T02	2.09	2.92	1.71
1/2”	514T03	2.09	2.92	1.71
3/4”	514T04	2.52	3.31	1.81
1”	514T05	2.48	3.90	2.13
1-1/4”	514T06	2.72	4.61	2.25
1-1/2”	514T07	3.15	5.08	2.44
2”	514T08	3.53	5.99	2.70
2-1/2”	514T09	3.98	7.88	3.70
3”	514T10	4.37	8.83	4.02
4”	514T11	5.00	9.89	4.53

MATERIAL SPECIFICATIONS

No.	Part	Material	ASTM Spec
1	Wheel Nut	Hot Rolled	SAE 1010R
2	Name Plate	Aluminum	A1100
3	Handwheel	Cast Iron	JIS ZZ2202
4	Packing Nut	Brass	B16 C36000
5	Gland Ring	Brass	B16 C36000
6	Gland Packing	Graphite	LK 33 NAFG
7	Bonnet	Brass	B584 C85710
8	Packing	Fiber “H”	Non Asbestos
9	Stem	Brass 1/4” - 2”	B16 C36000
		Brass 2-1/2” - 2”	B584 C85710
10	Lock Nut	Brass	B16 C36000
11	Disc	Brass	B584 C85710
12	Body	Brass	B584 C85710

MATCO-NORCA

Global sourcing. National compliance. Local service.

CALIFORNIA 5593 Fresca Dr., La Palma CA 90623 • Toll Free: 866-532-8306 • Fax: 866-532-8307
TEXAS 1150 Silber Rd., Houston TX 77055 • Toll Free: 800-935-5456 • Fax: 713-680-2999
NEW YORK PO Box 27, Rt. 22, Brewster NY 10509 • Toll Free: 800-431-2082 • Fax: 845-278-9056
WEB: **www.matco-norca.com** EMAIL: **mail@matco-norca.com**