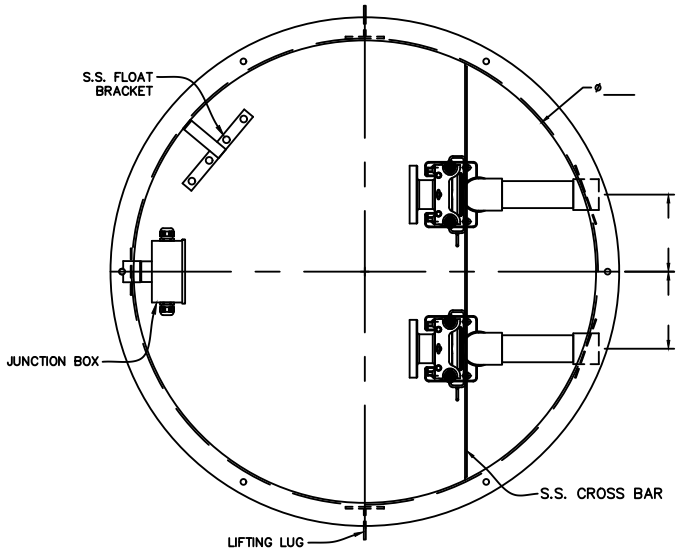

PLAN VIEW

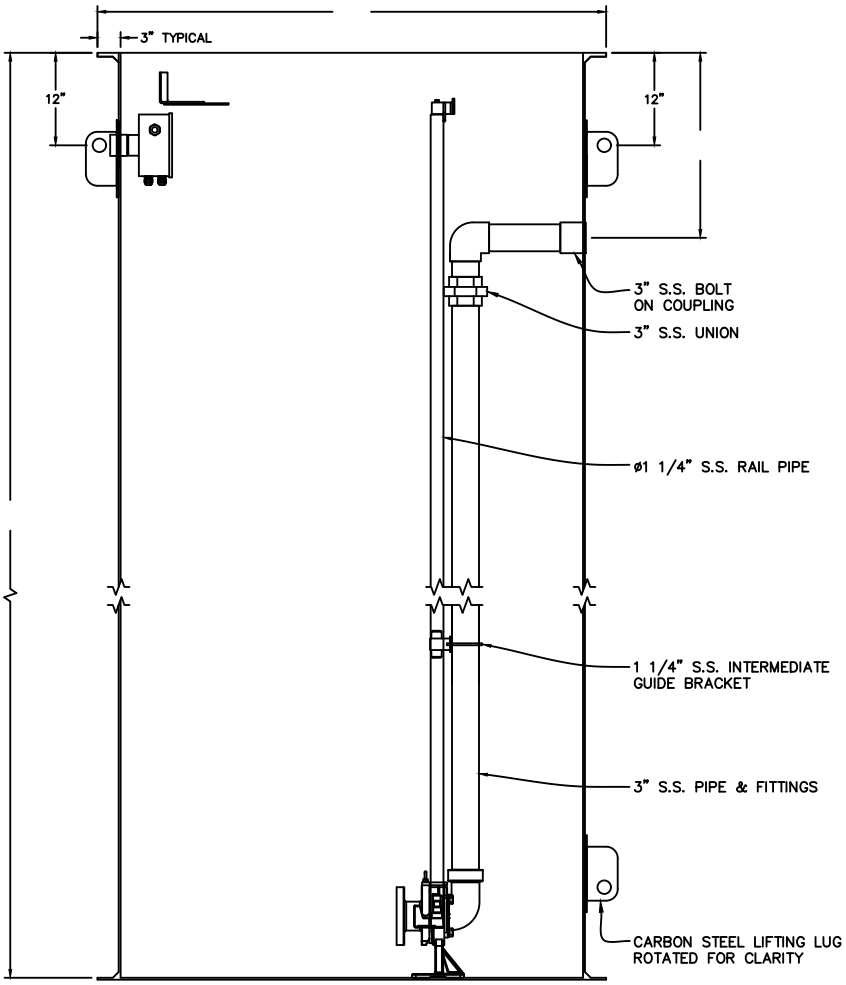

SECTIONAL ELEVATION VIEW

STEELE PLASTICS, INC.
1280 Sturgis Rd.
Conway, AR 72034
(501) 327-5122 Fax (501) 327-0807

TITLE	PACKAGE DUPLEX 3" NO VALVES – S.S. 20'
PROJECT	JOB NO.
	P.O. NO.
CUSTOMER	DWG. NO. PFD300H-NV-SS20

F:\A_CAD\PROJECTS\WEBSITE DRAWINGS 2020\GUIDE RAIL SYSTEMS\FREEFLO SYSTEM DRAWINGS\SYSTEMS - NV\3.0 Systems NV\PFD300H-NV-SS20.dwg, SYSTEM, 12/15/2020 4:21:39 PM